VANTAGE ROD Bracketing

The distance between the front curtain & back curtain is 23mm (measuring from top of Eyelet Rod to top of Finetrak)

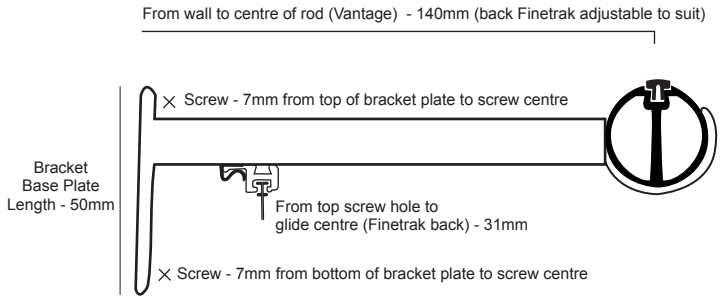

Vantage Rod Front / Finetrak Back

The distance between the front curtain & back curtain is 63mm (measuring from top of Eyelet Rod to bottom of 25mm Rod)

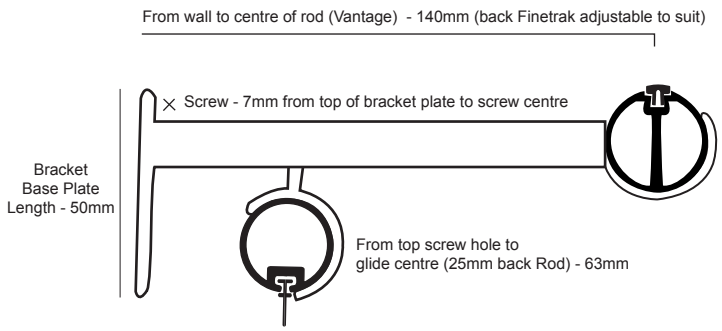

Vantage Front / 25mm Versatrak Back

The distance between the front curtain & back curtain is 57mm (measuring from top of Eyelet Rod to bottom of 16mm Rod)

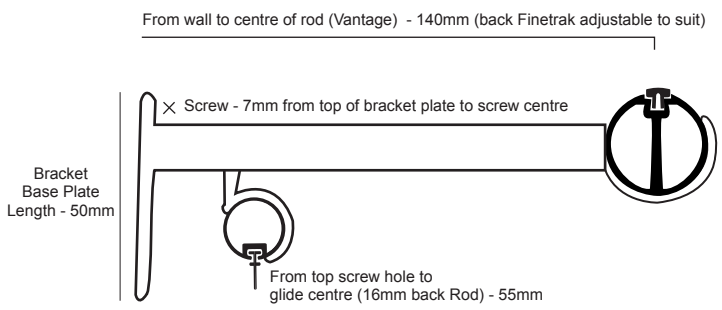

Vantage Front / 16mm Versatrak Back